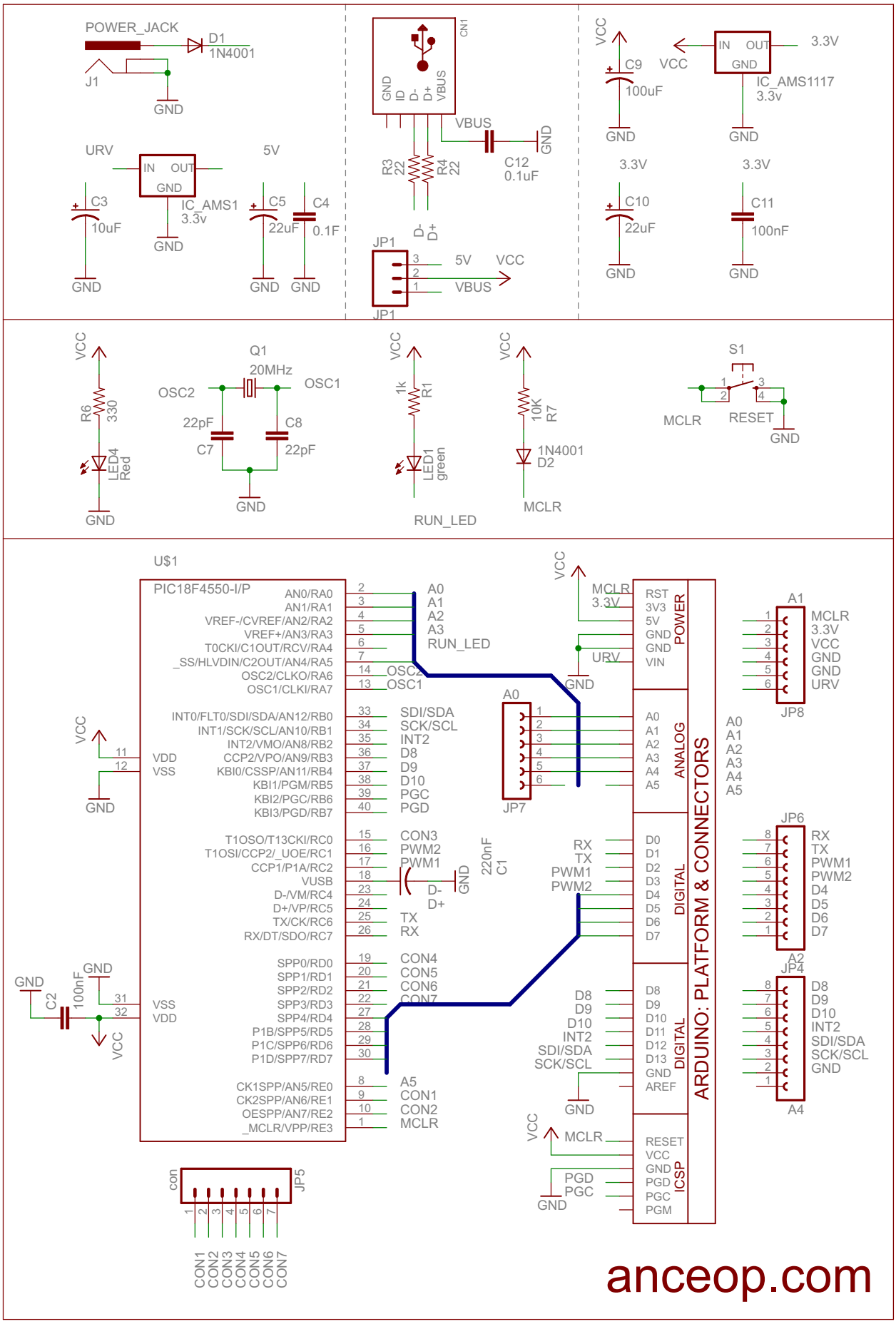
POWER_JACK
D1
1N4001
J1
GND
URV
IN OUT
GND
IC_AMS1
3.3v
C3
10uF
5V
C5
22uF
C4
0.1F
CN1
GND ID D- D+ VBUS
VBUS
C12
0.1uF
R3
22
R4
22
D-
D+
JP1
5V
VCC
VBUS
VCC
C9
100uF
IN OUT
GND
IC_AMS1117
3.3v
3.3V
C10
22uF
C11
100nF
R6
330
LED4
Red
Q1
20MHz
OSC2
OSC1
22pF
C7
C8
22pF
1k
R1
LED1
green
RUN_LED
10K
R7
1N4001
D2
MCLR
S1
MCLR
RESET
U$1
PIC18F4550-I/P
AN0/RA0
AN1/RA1
VREF-/CVREF/AN2/RA2
VREF+/AN3/RA3
T0CKI/C1OUT/RCV/RA4
_SS/HLVDIN/C2OUT/AN4/RA5
OSC2/CLKO/RA6
OSC1/CLKI/RA7
INT0/FLT0/SDI/SDA/AN12/RB0
INT1/SCK/SCL/AN10/RB1
INT2/VMO/AN8/RB2
CCP2/VPO/AN9/RB3
KBI0/CSSP/AN11/RB4
KBI1/PGM/RB5
KBI2/PGC/RB6
KBI3/PGD/RB7
T1OSO/T13CKI/RC0
T1OSI/CCP2/_UOE/RC1
CCP1/P1A/RC2
VUSB
D-/VM/RC4
D+/VP/RC5
TX/CK/RC6
RX/DT/SDO/RC7
SPP0/RD0
SPP1/RD1
SPP2/RD2
SPP3/RD3
SPP4/RD4
P1B/SPP5/RD5
P1C/SPP6/RD6
P1D/SPP7/RD7
CK1SPP/AN5/RE0
CK2SPP/AN6/RE1
OESPP/AN7/RE2
_MCLR/VPP/RE3
VDD
VSS
A0
A1
A2
A3
RUN_LED
OSC2
OSC1
SDI/SDA
SCK/SCL
INT2
D8
D9
D10
PGC
PGD
CON3
PWM2
PWM1
D-
D+
TX
RX
CON4
CON5
CON6
CON7
A5
CON1
CON2
MCLR
220nF
C1
C2
100nF
JP7
RST
3V3
5V
GND
GND
VIN
POWER
ANALOG
DIGITAL
DIGITAL
ICSP
D0
D1
D2
D3
D4
D5
D6
D7
D8
D9
D10
D11
D12
D13
GND
AREF
RESET
VCC
GND
PGD
PGC
PGM
ARDUINO: PLATFORM & CONNECTORS
JP8
JP6
JP4
JP5
con
CON1
CON2
CON3
CON4
CON5
CON6
CON7
anceop.com